组会报告

蓝 鑫
2020年4月16日

Motivation

Yu, C., et al. (2020). Context Prior for Scene Segmentation. CVPR 2020.

建模上下文依赖的方法：

1. 基于注意力，缺点是可能会选择不需要的上下文依赖关系。
2. 基于金字塔的方法，缺点是当场景中有混淆的类别时，可能导致不太可靠的上下文。

确定的上下文依赖关系有助于网络理解场景。统一类别（类内上下文）的相关性和不同类别（类间上下文）的差异性使得特征表示得更加健壮，减少了可能类别的搜索空间。

解决方法：用Ground Truth建模类内和类间的先验知识，来区分哪些像素属于当前像素的同一类，反向的先验关注不同类别的像素。

Motivation

Yu, C., et al. (2020). Context Prior for Scene Segmentation. CVPR 2020.

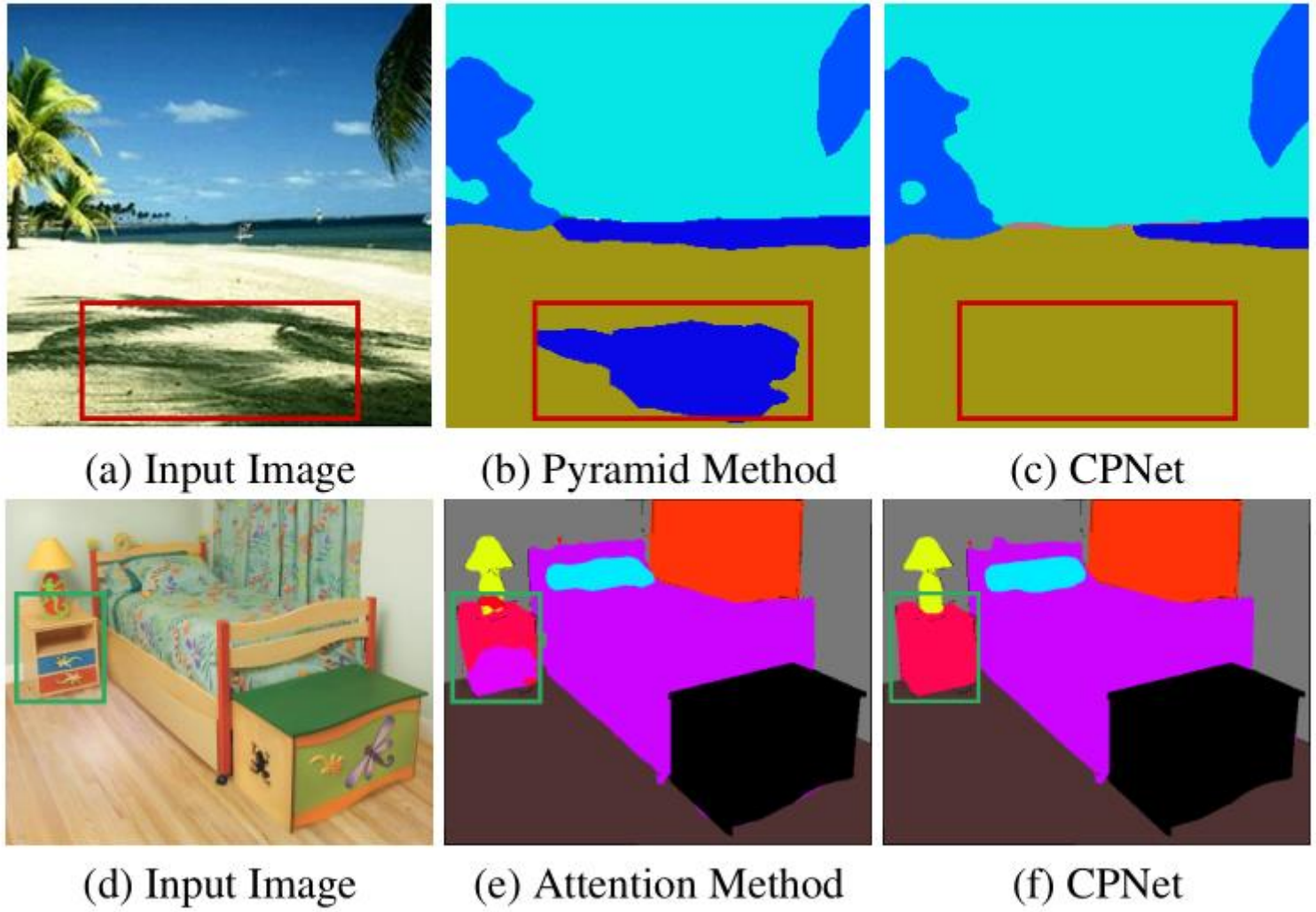

(a) Input Image (b) Pyramid Method (c) CPNet

(d) Input Image (e) Attention Method (f) CPNet

难分样本

Method

Yu, C., et al. (2020). Context Prior for Scene Segmentation. CVPR 2020.

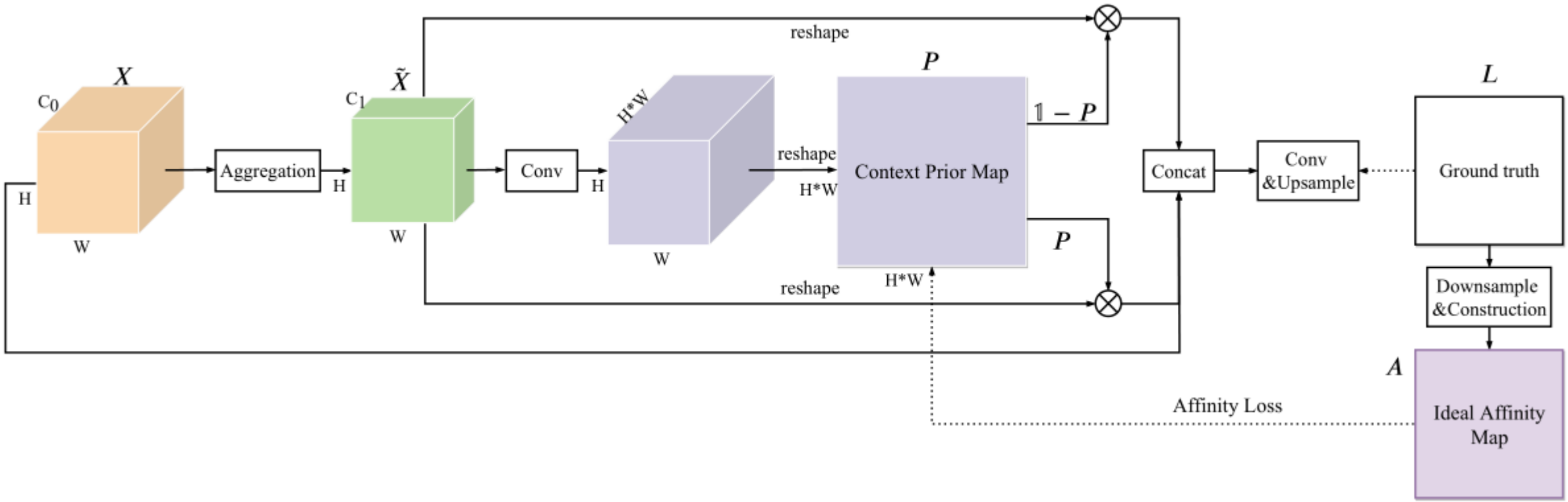

Context Prior 层

Method

Yu, C., et al. (2020). Context Prior for Scene Segmentation. CVPR 2020.

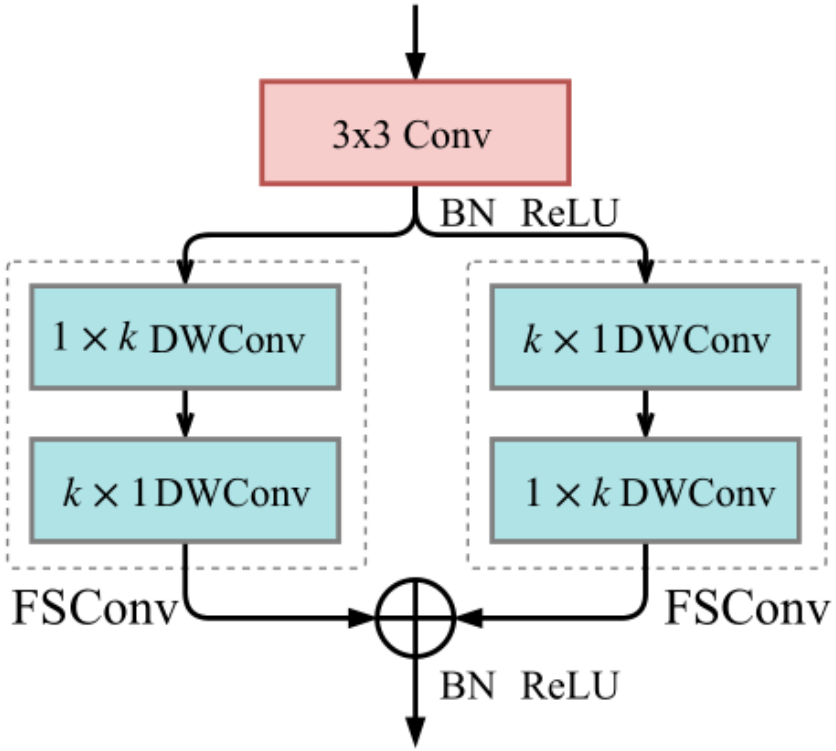

(a) Aggregation Module

设计了一个完全可分卷积（空间和深度维度）聚合局部空间信息。

Method

Yu, C., et al. (2020). Context Prior for Scene Segmentation. CVPR 2020.

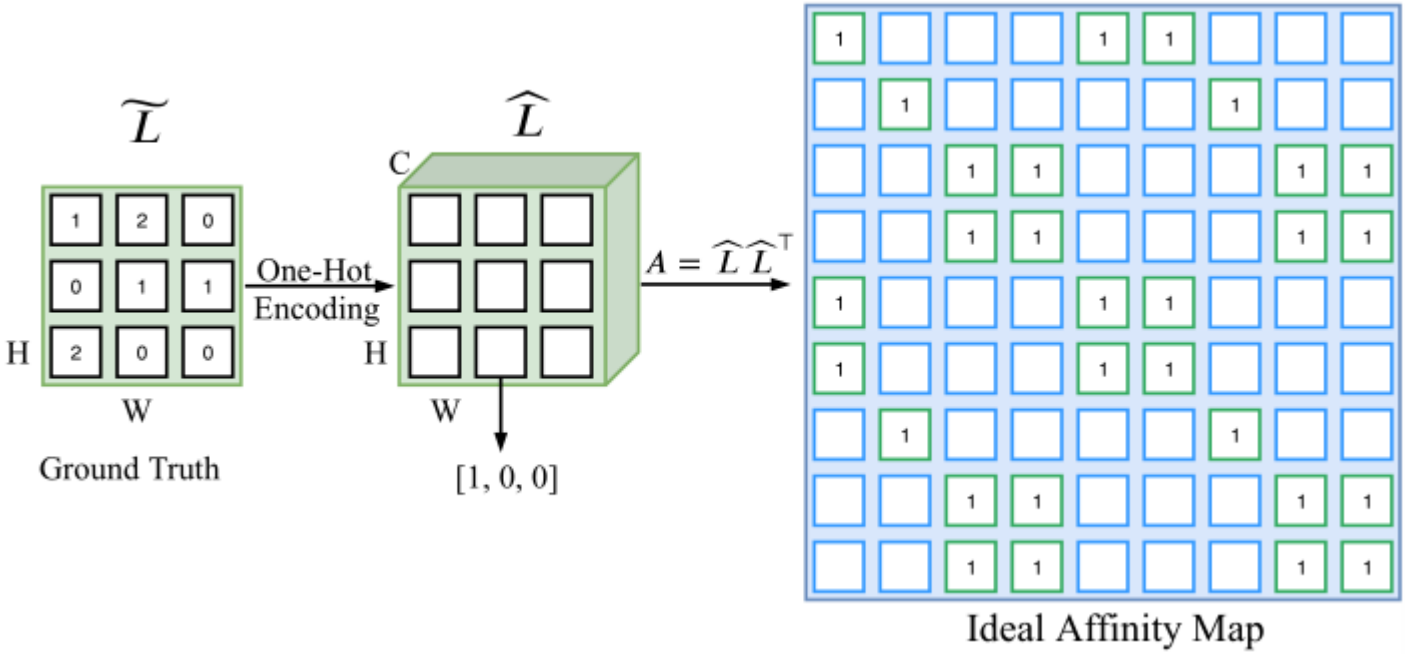

通过 Ground Truth 建立 Ideal Affinity Map 作为监督

Method

Yu, C., et al. (2020). Context Prior for Scene Segmentation. CVPR 2020.

$$\mathcal{T}_j^p = \log \frac{\sum_{i=1}^N a_{ij} p_{ij}}{\sum_{i=1}^N p_{ij}},$$

Tp 表示类内预测值（查准率）

$$\mathcal{T}_j^r = \log \frac{\sum_{i=1}^N a_{ij} p_{ij}}{\sum_{i=1}^N a_{ij}},$$

Tr 表示真实类内率（查全率）

$$\mathcal{T}_j^s = \log \frac{\sum_{i=1}^N (1-a_{ij})(1-p_{ij})}{\sum_{i=1}^N (1-a_{ij})},$$

Ts 表示真实类间率（特异性，负例占所有负例的比例）

$$\mathcal{L}_g = -\frac{1}{N}\sum_{j=1}^N (\mathcal{T}_j^p + \mathcal{T}_j^r + \mathcal{T}_j^s),$$

$$\mathcal{L}_p = \lambda_u \mathcal{L}_u + \lambda_g \mathcal{L}_g,$$

引入 Affinity loss 来显式规范网络建模类别间的关系。仅使用一元项损失（二元交叉熵）仅考虑了先验图中孤立的像素，忽略了像素间的语义关系。因此设计了基于二元交叉熵的全局项。

Experiments

Yu, C., et al. (2020). Context Prior for Scene Segmentation. CVPR 2020.

model	*mIoU*	*pixAcc*
ResNet-50 (Dilation)	34.38	76.51
ResNet-50 + Aux (Baseline)	36.24	77.37
ResNet-50 + ASPP	40.39	79.71
ResNet-50 + PSP	41.49	79.61
ResNet-50 + NonLocal	40.96	79.98
ResNet-50 + PSA	41.92	80.17
ResNet-50 + Aggregation Module	41.51	79.93
ResNet-50 + IntraPrior (BCE)	42.34	80.15
ResNet-50 + InterPrior (BCE)	41.88	79.96
ResNet-50 + IntraPrior (AL)	42.74	80.30
ResNet-50 + InterPrior (AL)	42.43	80.21
ResNet-50 + ContextPriorLayer	43.92	80.77
ResNet-50 + ContextPriorLayer_MS	44.46	81.38
ResNet-101 + ContextPriorLayer	45.39	81.04
ResNet-101 + ContextPriorLayer_MS	**46.27**	**81.85**

Table 1. Ablative studies on the ADE20K [52] validation set in comparison to other contextual information aggregation approaches. (Notation: *Aux* auxiliary loss, *BCE* binary cross entropy loss, *AL* Affinity Loss, *MS* multi-scale and flip testing strategy.)

Experiments

Yu, C., et al. (2020). Context Prior for Scene Segmentation. CVPR 2020.

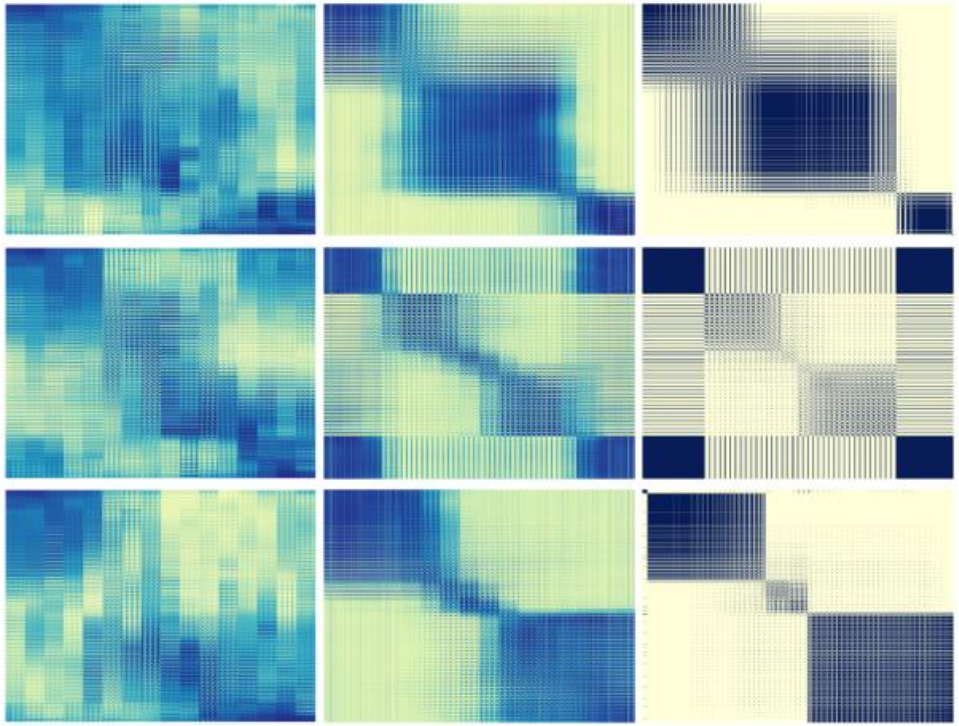

(a) Attention Map (b) Learned Prior Map (c) Ideal Affinity Map

Figure 6. **Visualization of the Prior Map predicted by our CP-Net**. (a) We only use the Aggregation Module to generate an attention map without the supervision of the Affinity Loss. (b) With the guidance of the Affinity Loss, the Context Prior Layer can capture the intra-class context and inter-class context. (c) The Ideal Affinity Map is constructed from the ground truth. Deeper color denotes higher response.